LOBERON

COMING HOME

10 min

2

AX1	BX4	CX4	DX4	EX4
	4X40mm	3X20mm	6X40mm	58X58X18mm

1

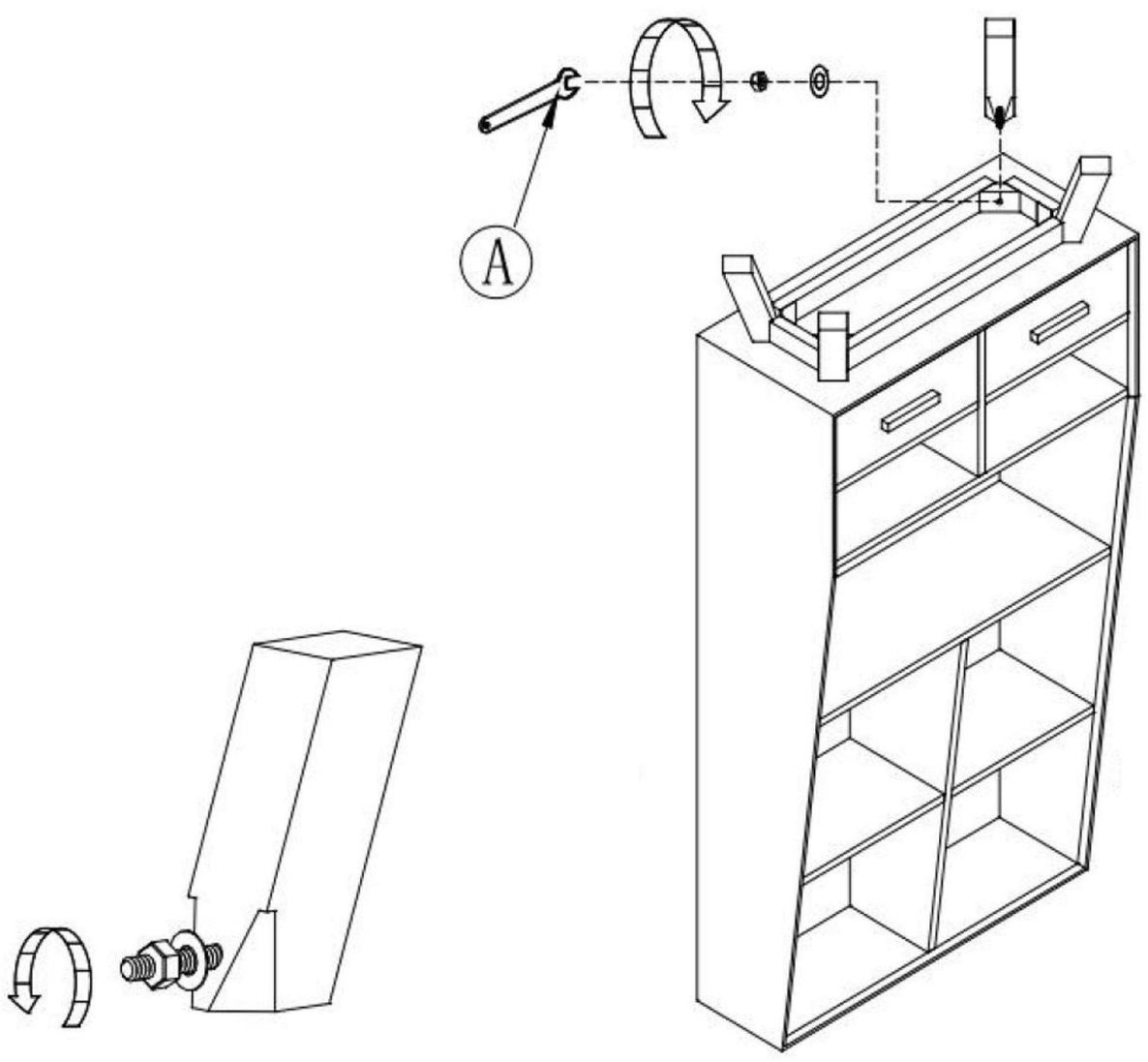
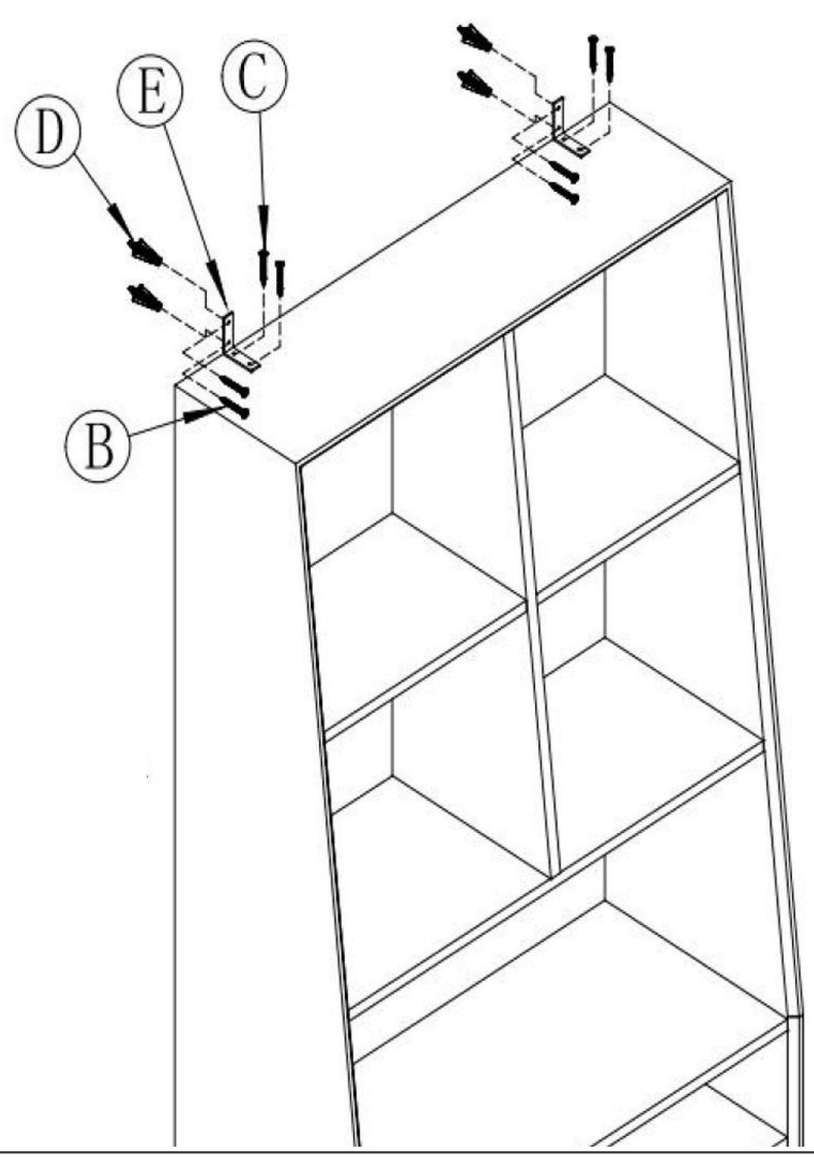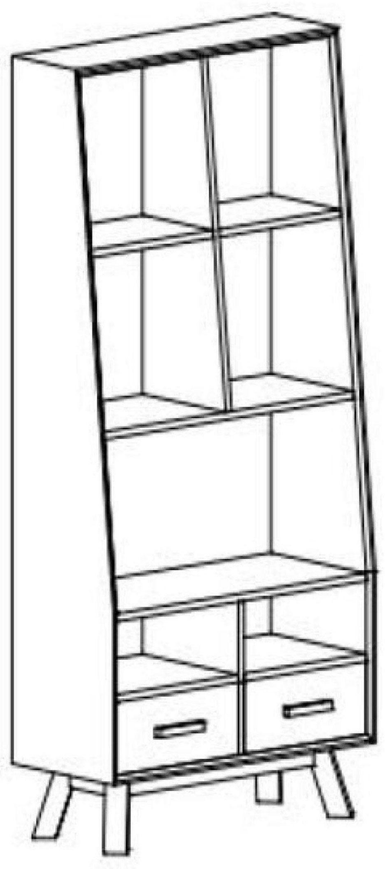
2