LOBERON

COMING HOME

15 min

1

AX8	BX8	CX1
ϕ10X55 mm	8x22mm	M6

1

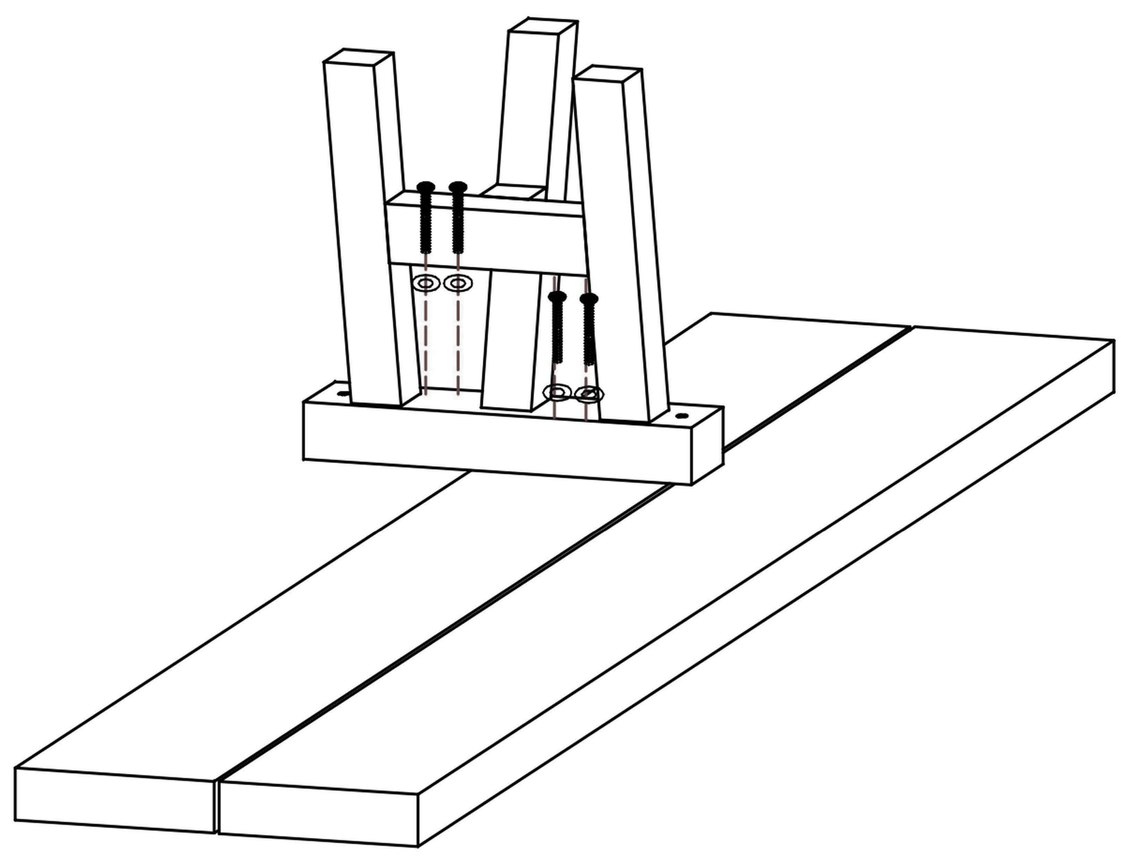

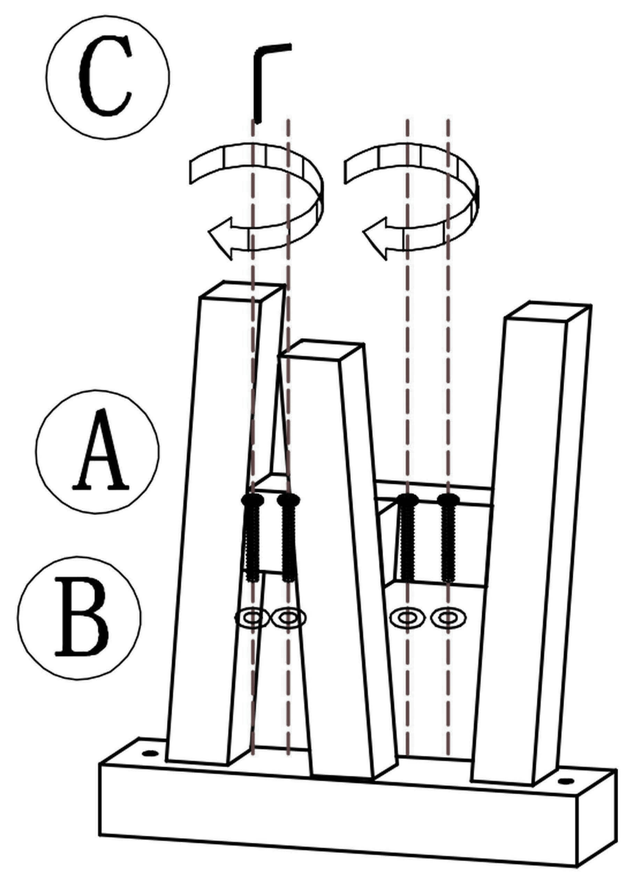
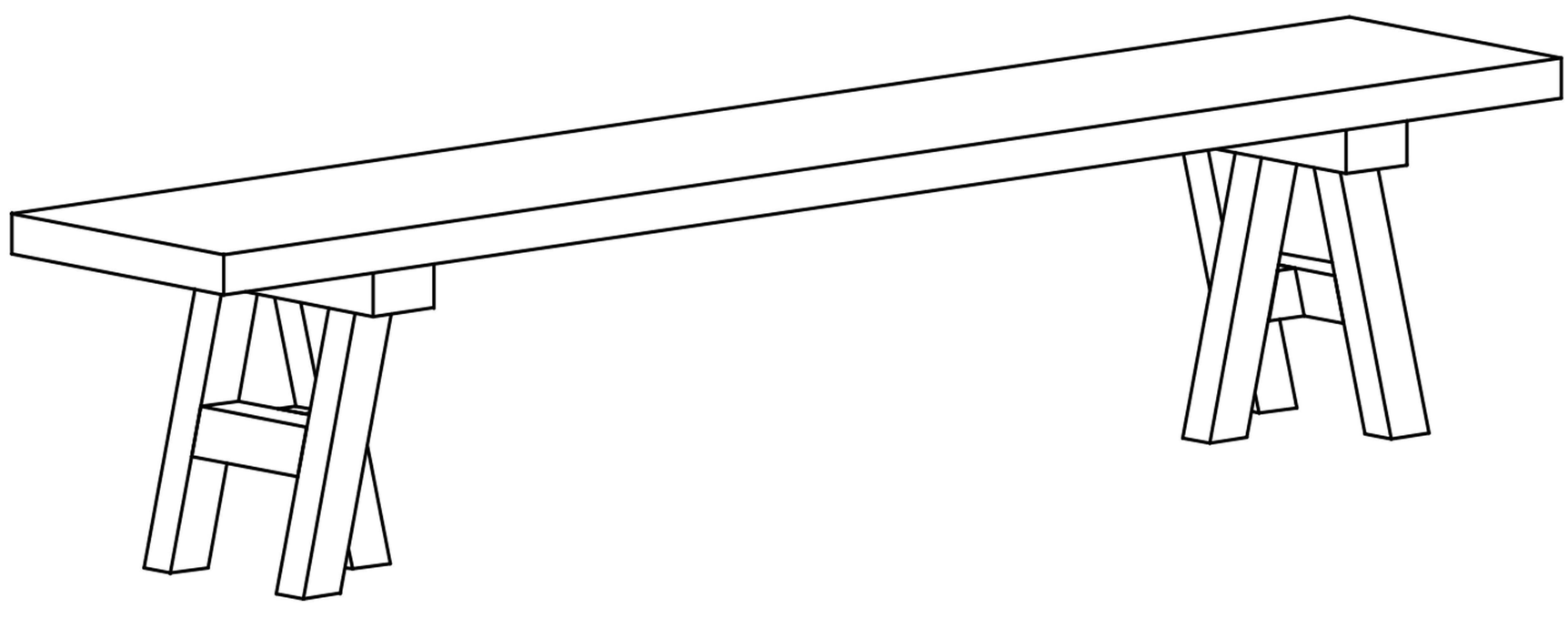
2